Checking Dual-Mass Flywheel (DMF) on Vehicles with PDK (11/14)

Change overview

Version	Date	Change
0	April 24, 2014	First publication
1	September 9, 2020	• Structure reworked • Information added under description of grease leaking out • Information added under "Cup spring diaphragm damaged"

Model Line: **Panamera (970) / Panamera (971)**

911 Carrera (991)

Boxster (981)

Cayman (981)

Model Year: **As of 2010**

Equipment: **Double clutch transmission (PDK)**

Concerns: **Dual-mass flywheel (DMF)**

Information:
- Checking dual-mass flywheel (DMF) on vehicles with PDK.
- Additional information about the technical features of the dual-mass flywheel.

Assessment:

Information

The following **illustrations and graphics are shown only as examples** for the sake of clarity.

⇒ The **actual component** can be **different to the component shown**, depending on the vehicle.

a) Dual-mass flywheel is **installed**:	
Increase engine speed evenly from idle speed when the vehicle is stationary: ⇒ Do the vibrations get stronger as engine speed increases?	
No	**YES**
⇒ No action required.	⇒ Remove and check dual-mass flywheel.

b) Dual-mass flywheel is **removed**:

- Visual inspection:

A small amount of grease is leaking out:

A small amount of grease is leaking out of the dual-mass flywheel ⇒ *Figure 1* and there is a ring of grease in the clutch housing ⇒ *Figure 2* .

Figure 1

Figure 2

⇒ Replacement of the dual-mass flywheel is not justified.
Function OK

Grease leaking from the dual-mass flywheel is function-related and does not result in function restrictions, noises or vibrations. The grease leak may be due to vibrations caused by a rough-running engine, for example.

If a significant amount of grease is leaking out, the cause of the engine problems must first be detected and corrected.

⇒ Remove grease and clean the clutch housing.

A ring of grease as shown in Figure 2 is considered acceptable and does not justify replacing the dual-mass flywheel. More dynamic driving can cause grease to leak out like this. After removing this excess emerging grease, it is unlikely that it will happen again. For this reason, we do not recommend that you install a new part. However, the dual-mass flywheel must be checked based on the other inspection criteria listed in this assessment in order to determine whether it needs to be replaced.

A large amount of grease is leaking out:

A large amount of grease is leaking out of the dual-mass flywheel ⇒ *Figure 3* and there is a full ring of grease in the clutch housing ⇒ *Figure 4* .

⇒ Replacement of the dual-mass flywheel is justified.
Function not OK

⇒ Remove grease and clean the clutch housing.

Figure 3

Figure 4

Balancing weight missing:

A balancing weight is missing and only the bonding points are left ⇒ *Figure 5* .

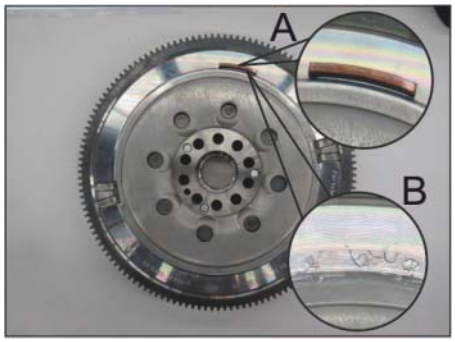

Figure 5

⇒ Replacement of the dual-mass flywheel is justified.

Cup spring diaphragm damaged:

The cup spring diaphragm is damaged ⇒ *Figure 6* .

⇒ Replacement of the dual-mass flywheel is justified.

The costs incurred for this damage must not be settled under guarantee or warranty.

 *Figure 6*	Damage to the cup spring diaphragm occurs as a result of improper removal of the transmission (tilting). **⇒ Make sure not to tilt the transmission during removal.**
• Mechanical check:	
Flange can be turned: The flange must turn torsionally, but must not turn back automatically. The possible turning angle (clearance angle) is approx. 2° - 10° ⇒ *Figure 7* . 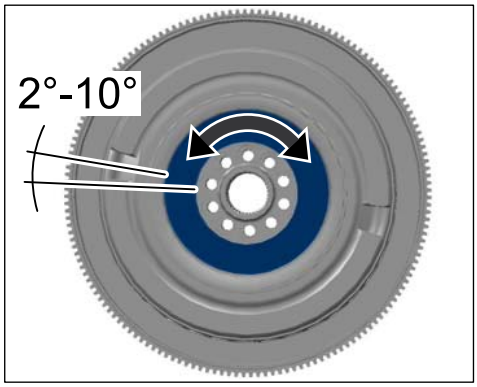 *Figure 7*	**⇒ Replacement of the dual-mass flywheel is not justified.**

Flange can be moved: The flange must move radially/axially ⇒ *Figure 8*.	**⇒ Replacement of the dual-mass flywheel is not justified.**
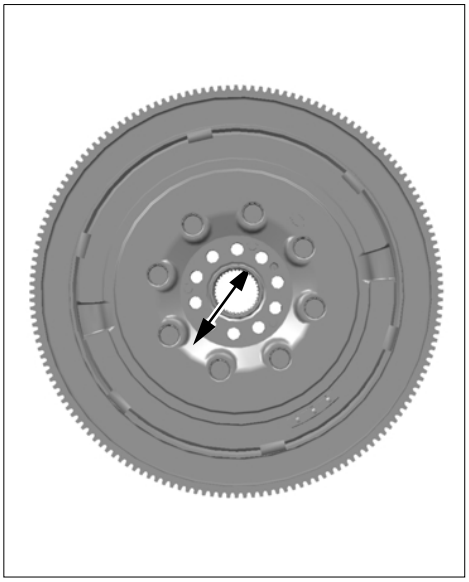 *Figure 8*	This property is required for the PDK transmission and is used for compensation in the event of a static offset between engine and transmission.

References: ⇒ *Workshop Manual '136019 Removing and installing flywheel'*